ZUMMESH-NETBRIDGE

Zūm™

Zūm™ Network Bridge

- *Converts a standalone, single-room Zūm™ lighting control system into a centrally managed networked system*
- *Zūm Net wireless mesh network technology affords robust, building-wide communications without running wires*
- *Provides Bluetooth® connectivity for easy room configuration using the Zūm mobile app*
- *Attaches to a Zūm J-Box Load Controller or Zūm J-Box Accessory Power Supply [1]*
- *UL 2043 listed for installation in an environmental air handling space*

The Zūm™ Network Bridge (ZUMMESH-NETBRIDGE) adds enhanced integration and setup capabilities to a Zūm lighting control system. It simply snaps onto a Zūm J-Box Load Controller or Zūm J-Box Accessory Power Supply (ZUMMESH-JBOX or ZUMMESH-JBOX-PSU [1]) to enable Zūm Net wireless communication with a Zūm Floor Hub via a Zūm Wireless Gateway (ZUM-FLOOR-HUB and ZUMNET-GATEWAY [1]). Integration with the Zūm Floor Hub enables every room in the building to be centrally monitored, managed, and controlled as part of a complete Zūm enterprise lighting solution. The Zūm Network Bridge also adds Bluetooth® connectivity within each room to allow simplified setup using a mobile device running the Zūm app. Just one network bridge is required per room.[2]

Zūm Across the Enterprise

Zūm delivers cutting-edge wireless lighting control and heightened energy efficiency for the intelligent enterprise. With each room wirelessly networked to a Zūm Floor Hub, Zūm synergizes lighting control across the enterprise by providing centralized monitoring, management, and reporting capabilities. Zūm Net wireless communication is enabled by simply adding a Zūm Network Bridge to each room and pairing it with a Zūm Wireless Gateway, which connects to the Zūm Floor Hub via Ethernet. The Zūm Network Bridge simply snaps onto a Zūm J-Box Load Controller or Zūm J-Box Accessory Power Supply in each room.[1,2]

Smart Lighting Control

The Zūm Network Bridge takes single-room Zūm lighting control to the next level. The Network Bridge comes with a corresponding setup app that enables installers to configure and customize the room's lighting controls. With the app, installers can set scenes, create scheduled events, and set up occupancy, vacancy, and daylight sensors. No programming is required when the controls are literally in hand!

Zūm Net Wireless Technology

Ultra-reliable Zūm Net wireless technology provides steadfast 2-way RF communications throughout a commercial structure without the need for physical control wiring. Employing a Wi-Fi® friendly 2.4 GHz mesh network topology, every Zūm Net device acts as an "expander," relaying wireless commands between the Zūm Gateway and all the other Zūm Net devices to ensure that every command reaches its intended destination without disruption. Each Zūm Net device that is added to the network effectively increases the range and stability of the entire network by providing multiple redundant signal paths. The wireless range between any two Zūm Net devices is typically up to 150 ft (46 m) indoors.[2]

Zūm Network Bridge (Left)
Shown with Zūm J-Box Load Controller (Right, sold separately)

SPECIFICATIONS

Wireless Communications

Bluetooth: Bluetooth low energy, Version 4.0, pairs with a mobile device running the Zūm app
Zūm Net: (Refer to the host J-Box device)

Note: Only one Network Bridge is permitted per room.

Controls & Indicators

SET: (1) Pushbutton and (1) red LED, used to connect to a Zūm Wireless Gateway [1]

Power Requirements

60 mA average, 250 mA peak at 3.3 Volts DC, provided by a Zūm J-Box Load Controller or Zūm J-Box Accessory Power Supply [1]

Environmental

Temperature: 32° to 104° F (0° to 40° C)
Humidity: 10% to 90% RH (non-condensing)

Construction

Housing: Plastic, white, UL 94 5VA flame rated
Mounting: Attaches to a Zūm J-Box Load Controller or Zūm J-Box Accessory Power Supply [1], meets the requirements of UL 2043 for installation in an environmental air-handling (plenum) space

ZUMMESH-NETBRIDGE Zūm Network Bridge

Dimensions

Height: 1.66 in (42 mm)
Width: 1.94 in (49 mm)
Depth: 1.01 in (26 mm)

Note: Projects ~0.75 inches (~18 mm) when attached to the J-Box unit.

Weight

3 oz (85 g)

Standards & Certifications

UL 2043, UL 916, UL 94 5VA, CEC Title 24 2013 compliant [3], ASHRAE 90.1-2016 [4], IECC-2015 [5], FCC

MODELS & ACCESSORIES

Available Models

ZUMMESH-NETBRIDGE: Zūm Network Bridge

Available Accessories

ZUMMESH-JBOX: Zūm J-Box Load Controller
ZUMMESH-JBOX-PSU: Zūm Accessory Power Supply
ZUMNET-GATEWAY: Zūm Wireless Gateway
ZUM-FLOOR-HUB: Zūm Floor Hub

Notes:

1. Item(s) sold separately. Refer to each product's spec sheet for more information.
2. "Zūm Net" refers to the wireless mesh network that connects one or more rooms with a Zūm Floor Hub, and consists of a Zūm Wireless Gateway and one or more Zūm Network Bridges. "Zūm Mesh" refers to the wireless mesh network within each room composed of dimmers, switches, load controllers, keypads, and sensors. AC-powered Zūm Net or Zūm Mesh devices function as wireless "expanders," which effectively extend the range of a Zūm Net or Zūm Mesh wireless network. Battery-powered devices do not provide expander functionality. Networks composed predominantly of battery-powered devices may require additional AC-powered devices, such as the ZUMMESH-JBOX-PSU, to function as expanders to fill any gaps in coverage.
3. This product is part of Crestron T24-2013 compliant solutions. Reference the T24-2013 design guide for additional devices required for fully compliant solutions.
4. This product is part of Crestron ASHRAE 90.1-2013 compliant solutions. Reference the ASHRAE 90.1-2013 design guide for additional devices required for fully compliant solutions.
5. This product is part of Crestron IECC-2015 compliant solutions. Reference the IECC-2015 design guide for additional devices required for fully compliant solutions.

All design guides can be accessed via the Consultant Partner Portal at http://www.crestron.com/about/partner-info/consultants-uplink.

This product may be purchased from an authorized Crestron dealer or distributor. To find a dealer or distributor, please contact the Crestron sales representative for your area. A list of sales representatives is available online at www.crestron.com/salesreps or by calling 800-237-2041.

For assistance with incorporating this product into a design or specification, please contact the Commercial Lighting Consultant Hotline at clcdesign@crestron.com or by calling 888-330-1502.

The specific patents that cover Crestron products are listed online at: patents.crestron.com.

Certain Crestron products contain open source software. For specific information, visit www.crestron.com/opensource.

Crestron, the Crestron logo, and Zūm are either trademarks or registered trademarks of Crestron Electronics, Inc. in the United States and/or other countries. Bluetooth is either a trademark or a registered trademark of Bluetooth SIG, Inc. in the United States and/or other countries. Wi-Fi is either a trademark or a registered trademark of Wi-Fi Alliance in the United States and/or other countries. Other trademarks, registered trademarks, and trade names may be used in this document to refer to either the entities claiming the marks and names or their products. Crestron disclaims any proprietary interest in the marks and names of others. Crestron is not responsible for errors in typography or photography. Specifications are subject to change without notice.
©2017 Crestron Electronics, Inc.

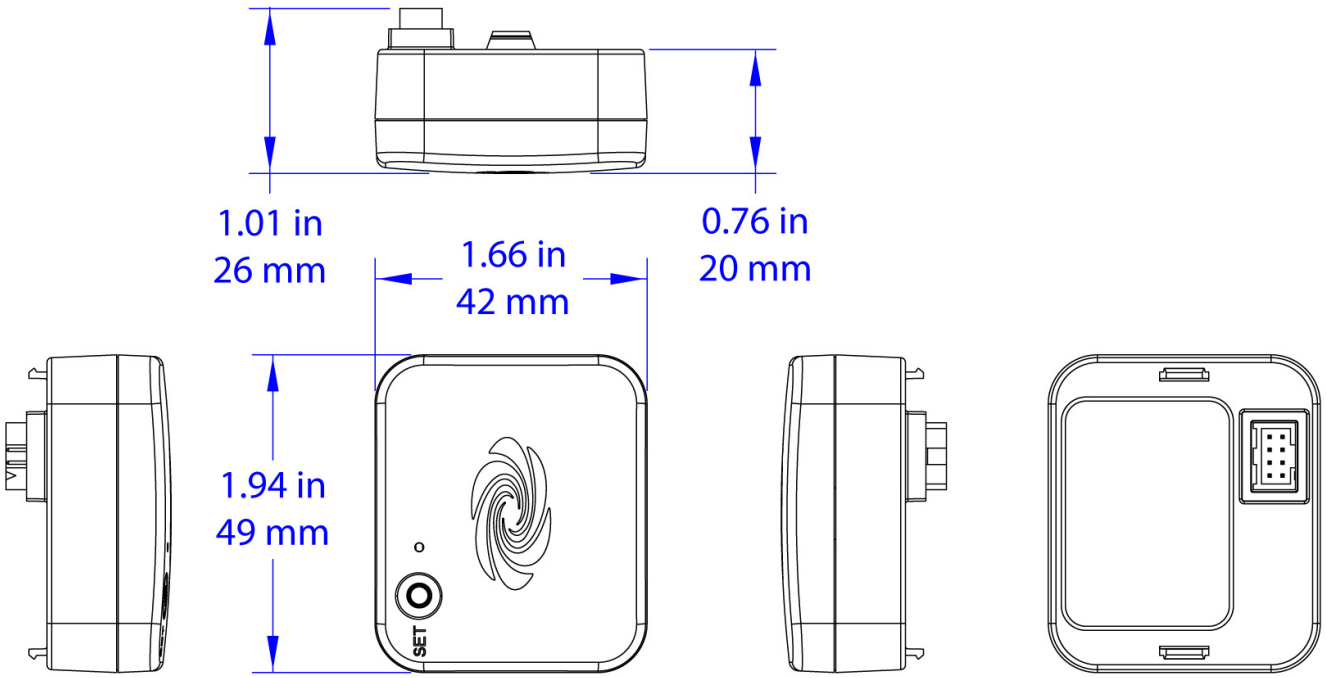

All brand names, product names and trademarks are the property of their respective owners.
©2017 Crestron Electronics, Inc.